6 Inch Inline Duct Ventilation Fan (V-6)

OVERVIEW

The 6-inch Inline Duct Ventilation Fan is a compact and efficient fan designed to improve air circulation and ventilation in indoor spaces. With its powerful motor, it moves a significant volume of air, removing stale air, and humidity. Its versatile design allows easy installation in various duct systems, ensuring a fresh and comfortable environment. Multiple fans can be connected and speed controlled together by using our FRC-1 fan controller.

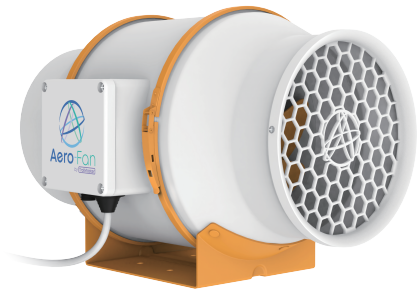

GENERAL INFORMATION

Brand	Aero-Fan
Model	V-6
Exterior Dimension	317mm x Φ147mm x 225.7mm 12.4in. x 5.79in. x 8.89in.
Connection Diameter	Φ150mm / 5.91in.
Package Weight	6.83lbs / 3.10kg
No. of Blades	8
Rotating Direction	CCW

SPECIFICATIONS

ITEMS	SPECIFICATIONS
Operating voltage range	100-277V~
Rated current	1A Max.
Rated input power	66W Max.
Maximum air flow	360 cfm
Maximum static air pressure	459 Pa
Operating temperature	-4~140°F
Mean Time To Failure (MTTF)	50000H (77°F)
Cells Lightning Protection	470V~
IP Rating	IP44

AIR FLOW PATTERN (FULL SPEED)

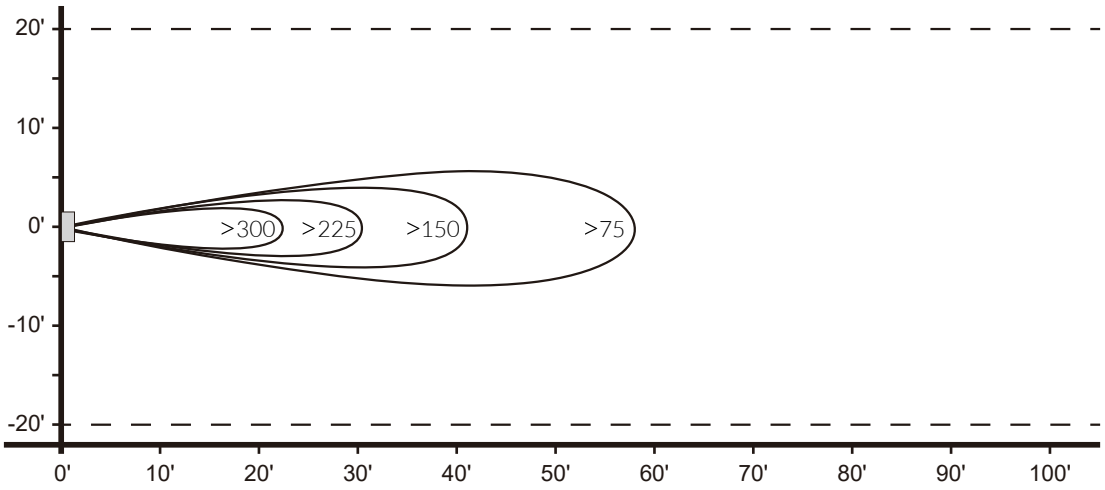

Above velocities shown in feet / minute.

OUTLINE DIMENSION

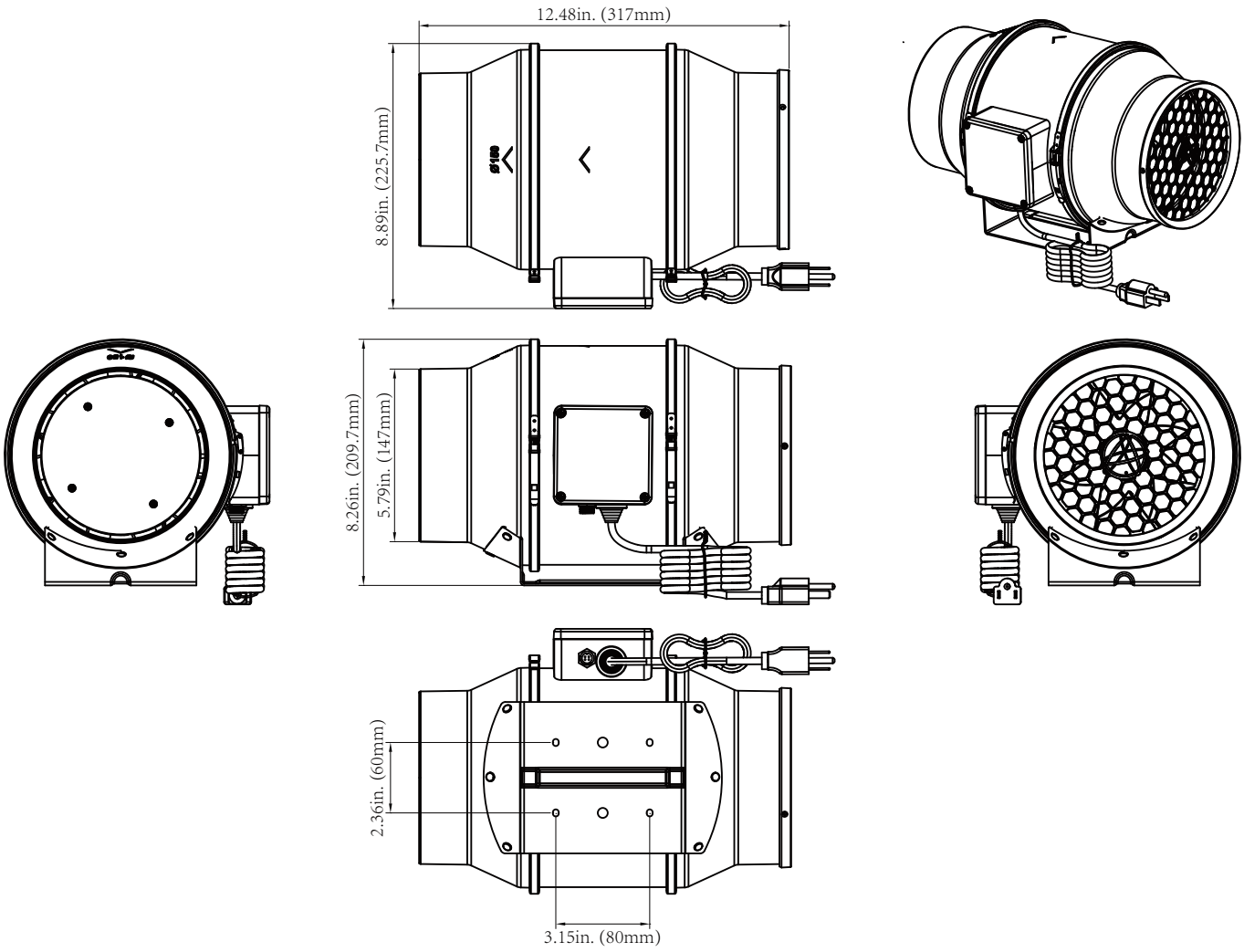

INSTALLATION GUIDE

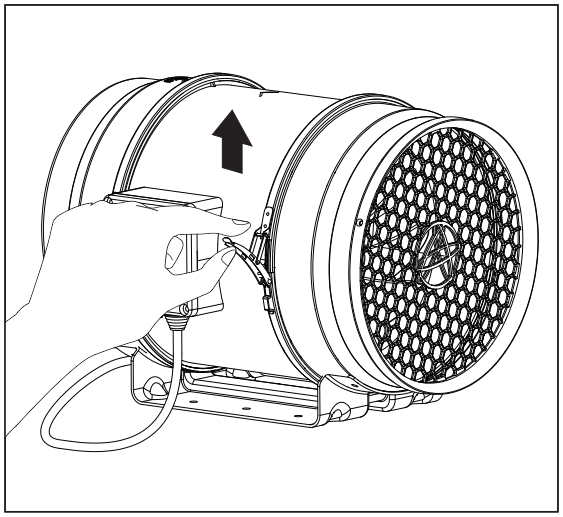

1.Unlock the clips to release the fan.

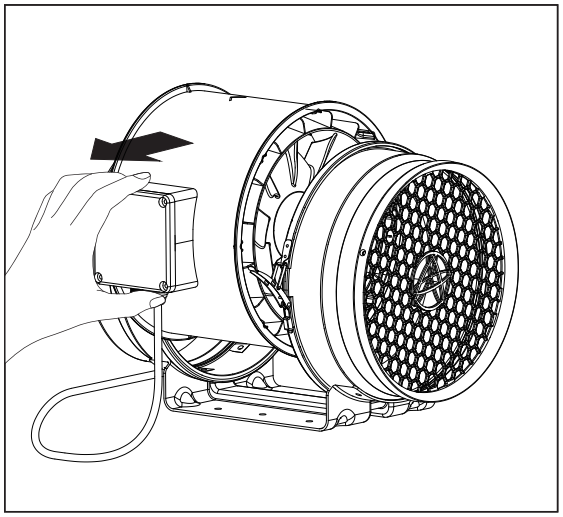

2.Carefully remove the fan body from its position.

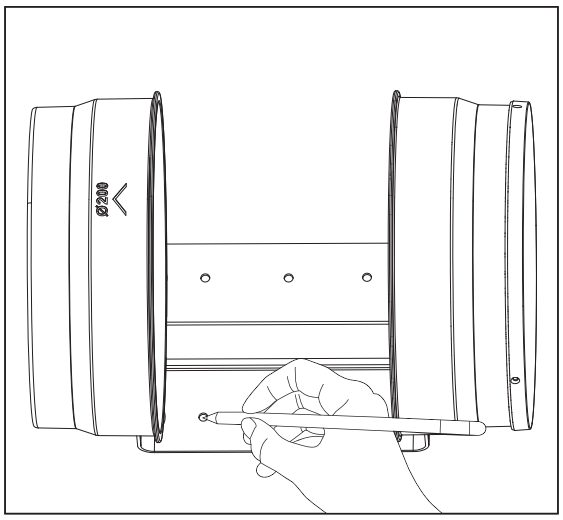

3.Mark the hole positions for reference.

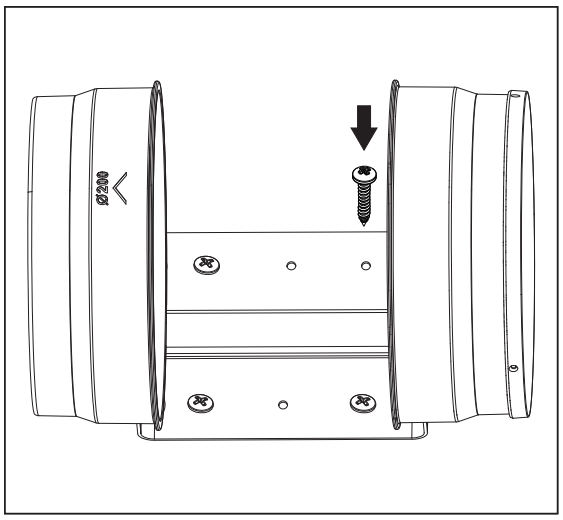

4.Attach the mounting bracket securely.

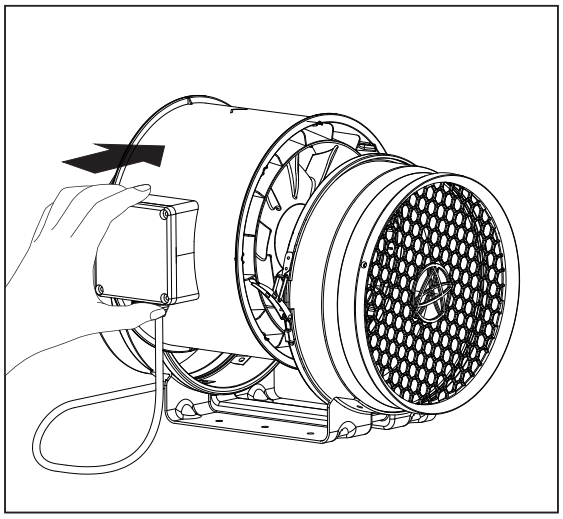

5.Reattach and secure the fan body.

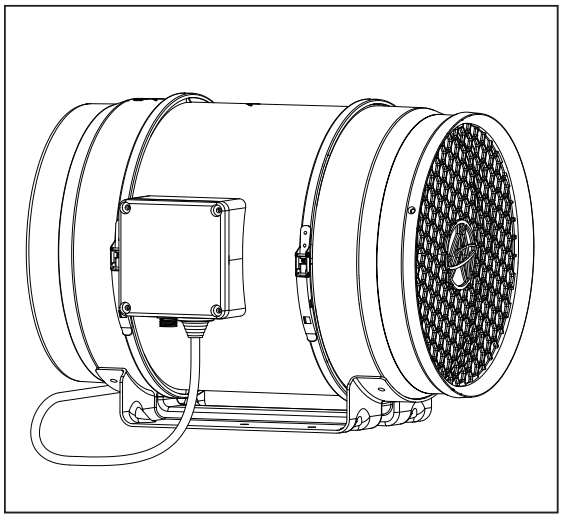

6.The fan installation process is now complete.

CONTROL AEROFAN USING TOLMASTER HYDRO-X PRO

Users have two options to connect AeroFan groups to the Hydro-X Pro (HCS-2) controller. Users can connect one fan group directly to the HCS-2 using TrolMaster ECS-9 cable set without using the optional Smart Fan Remote (FRC-1) manual control module. Users can also choose to connect the FRC-1 to each group of fans AND to the HCS-2 by using TrolMaster ECS-7 and ECS-9 cable sets. The FRC-1 provides a simple / manual speed control knob and digital display showing the fans speed. When the fan speed is adjusted using the FRC-1, it will remain for 30-minutes and then resume being controlled by the HCS-2. Whether you are using the FRC-1, or directly connecting your fans to the HCS-2 is up to the user. Aerofan provides multiple options and settings you can select from in order to customize how those fans will be operated. Multiple groups of fans can be connected and controlled using the HCS-2 controller and multiple FRC-1s.

*NOTE: ECS-9 is not included. This item is sold separately.

PRECAUTIONS

Please read this instructions booklet carefully before installing or starting up the product. It contains important information on personal and user safety measures to be followed while installing, using, and carrying out maintenance work on the equipment. Once the product has been installed, please provide this booklet to the end user.

Check that the fan is in perfect condition while unpacking. Any fault or damage caused in transportation should be noted. Please make sure that the apparatus coincides with the product you have ordered and that the specifications on the fan fulfil your requirements.

WARNING! This product is for indoor use only. Do not attempt to repair or use a damaged product. Do not immerse the product in water or subject it to physical abuse. Inspect the product regularly for cable, plug, and casing damage. Connect this product to a properly wired and grounded electrical outlet.

*This fan must not be mounted on a suspended or structural wall, ceiling, or floor. This fan has thermal protection.
*Ce ventilateur ne doit pas être monté sur un mur, un plafond ou un sol suspendu ou structural. Ce ventilateur est doté d'une protection thermique.
*To Reduce The Risk Of Injury To Persons, Install Fan At Least 2.1 m (7 Feet) Above The Floor.
*Pour réduire le risque de blessures, installez le ventilateur à au moins 2,1 mètres (7 pieds) du sol.

C ETL CM LISTED US
Intertek
5008191

CONFORMS TO
UL STD. 507
Certified To CSA STD.
C22.2 No.60335-1/-2-80

FC

TRANSPORT AND MANIPULATION

- The packaging used for this apparatus has been designed to support normal transportation conditions. The fan should always be transported in its original packaging as not doing so could deform or damage the product.
- The product should be stored in a dry place in its original packaging, protected from dust and dirt until it is installed in its final location. Do not accept delivery if the apparatus is not in its original packaging or shows clear signs of having been manipulated in any way.
- Do not place heavy weights on the packed product and avoid dropping it.

IMPORTANT INFORMATION FOR THE SAFETY OF INSTALLERS AND USER

- Installation must only be carried out by qualified persons.
- Make sure that the installation complies with each country's current mechanical and electrical requirements.
- Ventilators, or apparatus that include them, have been designed to move the air in the area at a rate stipulated on the specifications.
- This apparatus must not be used in explosive or corrosive atmospheres.
- The extractor outlet must not be connected to a duct used exhaust smoke or fumes from any appliance that uses gas or any other type of fuel.

SAFETY DURING INSTALLATION

- Make sure there are no loose items near the ventilator, as they could run the risk of being sucked up by it. If it is going to be installed in a duct, check that it is clean of any debris that could be sucked up by the ventilator.
- When installing an apparatus, make sure that all the fittings are in place and that the structure which supports it is resistant enough to bear its weight at full functioning power.
- Before installing the apparatus, make sure the mains power supply is disconnected, even if the device is switched off.
- Check that the mains supply voltage and frequency values coincide with the stipulations on the specifications.

- Please follow the connections diagram for the electrical connections.
- If an earth connection is necessary, check that it correctly connected.
- Ensure adequate thermal and overloading protection has been connected.

STARTING UP

Before starting up the machine, make sure that:

- The ventilator is well secured, and the electrical connections have been carried out correctly.
- The safety devices have been adequately connected.
- No loose material or fitting remains can be sucked up by the ventilator. If the ventilator has been mounted in a duct, make sure it is clear of loose material.
- The earth fittings are adequately connected.
- The electrical safety devices are correctly connected, adequately adjusted and ready for use.
- The wire and electrical connections inputs are correctly sealed and watertight.
- The fan is installed so that the fan blade moves air in the correct direction.
- There are no abnormal vibrations.
- If circuit protection device tripping operation, the apparatus must be quickly disconnected from the mains supply. The whole installation should be carefully checked before trying to start up the unit again.

MAINTENANCE

- Before manipulating the ventilator, make sure it is disconnected from the mains supply even if it has previously been switched off. Prevent the possibility of anyone else connecting it while it is being manipulated.
- The apparatus must be regularly inspected. These inspections should be carried out bearing in mind the machine's working conditions, to avoid dirt or dust accumulating on the turbine or motors. This could be dangerous and perceptibly shorten the working life of the ventilator unit.
- While cleaning, great care should be taken not to damage the fan blades.
- All maintenance and repair work should be carried out in strict compliance with each country's current safety regulations.

RECYCLING

EEC Standards, together with the responsibility we should assume with future generations in mind, oblige us to recycle all the materials we can. Therefore, please deposit all left-over material and packaging in their corresponding recycling containers.

AERO-FAN COMPLIANCE

The product complies with all applicable requirements for Restriction of Hazardous Substances (RoHS) and Waste Electronic and Electrical Equipment (WEEE). For Product Safety, EMC, RF, Energy, RoHS and WEEE information, go to www.trolmaster.com. Maintenance is not required for product compliance.

Batteries, electronic and electrical equipment should not be disposed of with household waste. Wherever possible, they should be segregated and brought to an appropriate collection point to enable recycling and avoid potential impacts on the environment and human health. For more information, contact your local authorities or place of purchase.

AERO-FAN LIMITED HARDWARE PRODUCT WARRANTY - A SUMMARY

Aero-Fan warrants that its hardware product shall be free from defects in materials and workmanship for the length of time identified on your product package beginning from the date of the original retail purchase. See www.trolmaster.com/News, Warranty for specific warranty information about your product and procedures to act on a warranty claim.

Aero-Fan's entire liability and your exclusive remedy for any breach of warranty shall be, at Aero-Fan's option, to repair or replace a functional equivalent of the product, or to refund the price paid, if the hardware is returned to the point of purchase or such other place as Aero-Fan may direct along with a receipt. Warranty protections are in addition to rights provided under local consumer laws and may vary among countries. See full warranty information to know your consumer rights and the additional protections provided by this product warranty. 3-year warranty for all products except one year warranty for sensor probes from the purchase day. This warranty gives you specific legal rights, and you may also have other rights, which vary from state to state.

For any issues or concerns with our products, DO NOT return them to the store. Please contact our tech support department at **support@trolmaster.com** or call **877-420-9876**.

August 2026 ©2026 Aero-Fan™ All rights reserved.